REVISIONS				
ZONE	REV.	DESCRIPTION	DATE	APPROVED

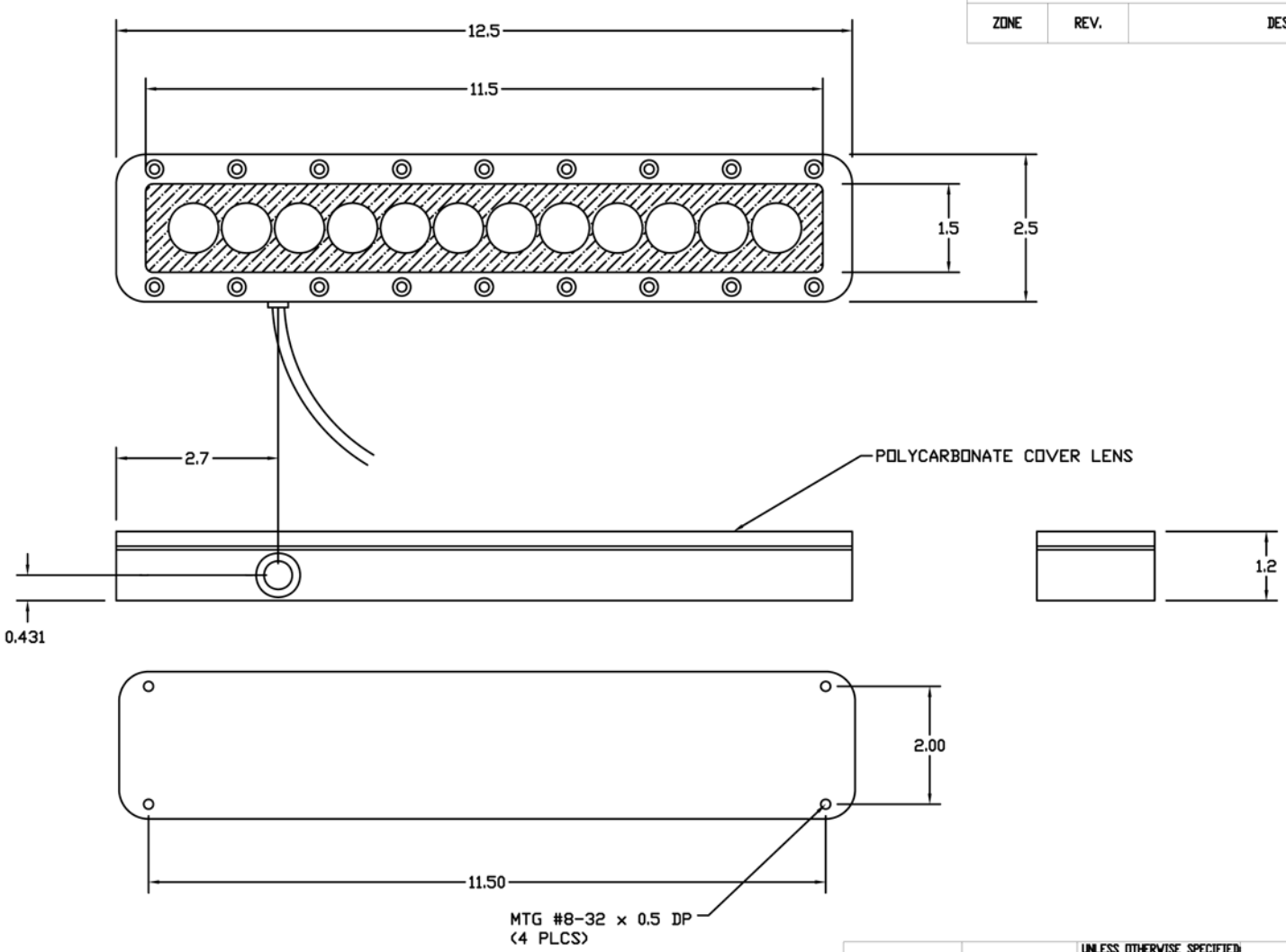

NOTES
1. AL BLK ANODIZED HOUSING
2. SEALED FROM FLUIDS
3. SUPPLIED WITH 10' HI-FLEX CABLE
4. 24 VOLT INPUT - 24 WATT MAX

PROPRIETARY AND CONFIDENTIAL
THE INFORMATION CONTAINED IN THIS DRAWING IS THE SOLE PROPERTY OF VISUAL OPTICS INC. ANY REPRODUCTION IN PART OR AS A WHOLE WITHOUT THE WRITTEN PERMISSION OF VISUAL OPTICS INC. IS PROHIBITED.

NEXT ASSY	USED ON
APPLICATION	

UNLESS OTHERWISE SPECIFIED:
DIMENSIONS ARE IN INCHES
TOLERANCES:
FRACTIONAL ±
ANGULAR: MACH ± BEND ±
TWO PLACE DECIMAL ±
THREE PLACE DECIMAL ±
INTERPRET GEOMETRIC TOLERANCING PER:
MATERIAL
FINISH
DO NOT SCALE DRAWING

	NAME	DATE
DRAWN		
CHECKED		
ENG APPR.		
MFG APPR.		
Q.A.		
COMMENTS:		

METAPHASE TECHNOLOGIES

TITLE:
MT-RBL-305

SIZE	DWG. NO.	REV
B		

SCALE: 1:1 WEIGHT: SHEET 1 OF 1