Condor 486EF

The Condor™ 486EF is an ultrasensitive, fiberoptic coupled camera for imaging phosphors and other xrayand electron scintillators. Applications that demand a large field of view and high optical throughput particularly benefit from the size and sensitivity of the Condor. The camera is based upon the CCD 486, a state-of-the-art, scientific grade, 4k x 4k sensor. At more than 36 cm^2 , the 486 is the largest commercially available CCD, and when coupled to a 1:1 imaging fiberoptic, it delivers unsurpassed optical throughput. The camera boasts a lownoise, dual speed, four port readout architecture for superior speed and sensitivity. Dark current is minimized with regulated thermoelectric cooling to –25 °C. Linear, 16bit dynamic range and sophisticated features such as software control over binning and gain make the Condor the ultimate instrument for low light detection of electron and x-ray images. The Condor 486 EF model is designed with the fiber optic protruding from the vacuum chamber such that the user can utilize a wide range of phosphors or other fiber optic scintillators. In addition, this model is ideally suited for mating with the fiber optic output of other apparatus such as streak tubes or image intensifiers.

Features	*Benefits*
4k x 4k sensor	High resolution (16 Megapixel)
60 mm x 60 mm CCD image area	Large field of view
1:1 straight fiber-optic faceplate	Highest throughput, no taper distortion
Four-port readout	Optimal design for speed and sensitivity
90 mm extended fiber	Efficient coupling & x-ray absorption
Deep thermoelectric cooling	Minimize dark noise
High-performance low-noise electronics	Minimize readout noise
Linear 16-bit dynamic range	Scientific precision and accuracy
Software-controlled binning & windowing	Optimize speed versus resolution
Plug-in for ImagePro Plus software	Data acquisitoin and analysis

www.fairchildimaging.com email: sales @fcimg.com Phone: +1.800.325.6975 Fax: +1.408.534.7352

Condor 486EF

Specifications

Sensor			
Type	CCD 486, scientific grade 1, front-illuminated		
Resolution	4096 x 4096 pixels		
Pixel Size	15 µm x 15 µm		
Image Area	61.44 mm x 61.44 mm		
Fiber Optic	1:1 external fiber-optic (90 mm diameter)		
Phosphor	Gadolinium Oxysulfide (Gd_2O_2S) - Custom phosphors available		
	Minimum	Typical	Maximum
Read Noise			
1 MHz		10 e-	12 e-
250 kHz		5 e-	7 e-
Full Well Capacity			
Single Pixel	80 ke-	100 ke-	
Output Register	700 ke-	800 ke-	
Gain		1.5 e-/ADU (nominal)	
Linearity		< 1%	
Dark Current (-25 °C)		0.5 e-/pix/sec	1.0 e-/pix/sec
Cooling	-25°C, Thermoelectric w/chilled water		
Output Ports	4 low noise amplifiers		
Readout Rate			
4 MHz	4 ports x 1 MHz		
1 MHz	4 ports x 250 kHz		
Binning and Windowing	1x1, 2x2, 4x4 and 8x8; Arbitrary sized centered window		
ADC Dynamic Range	16-bit		
Vertical Shift Speed	200 µsec		
Operating Range	15°C to 30°C; 40% to 75% relative humidity (non-condensing)		
PC Interface	USB 2.0		
I/O Triggers	External In, Expose Out, Shutter Out		
Dimensions (H x W x L)	6.0 in. x 5.2 in. x 14.0 in. (152 mm x 131 mm x 351 mm)		
Camera Weight	25 pounds (11.4 kg)		

*Note: All Specifications measured in 1x1 (full image) mode unless stated otherwise. Subject to change without notice.

www.fairchildimaging.com email: sales @fcimg.com Phone: +1.800.325.6975 Fax: +1.408.534.7352

Condor 486EF

Mechanical Drawing

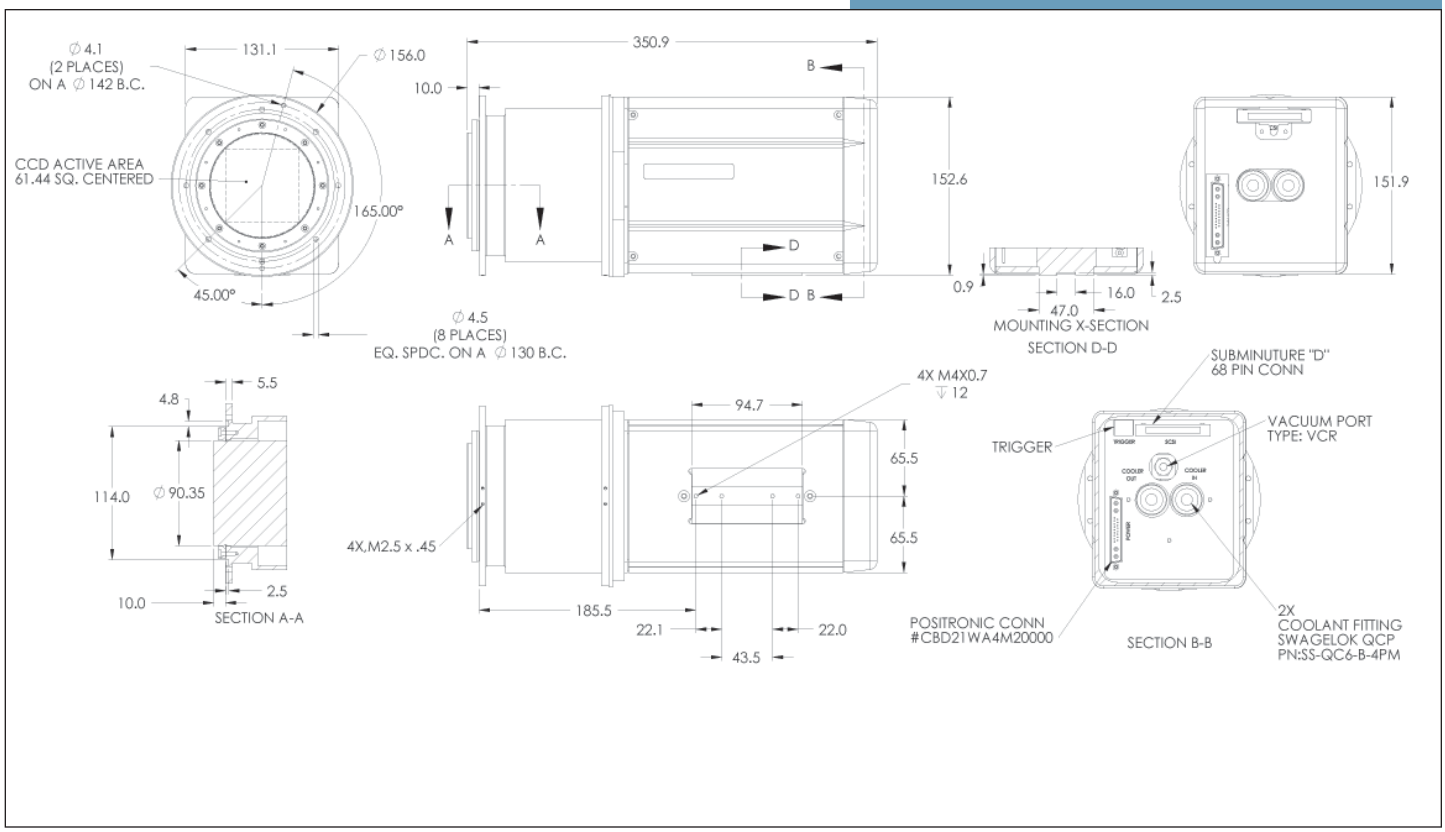

Readout Rates

	1 x 1 – 4MHz	2 x 2 – 2.5 MHz	4 x 4 – 2.1 MHz	8 x 8 – 1.6 MHz
Readout Time	6.5 sec	1.90 sec	1.18 sec	0.55 sec
Frame Rate	0.15 fps	0.52 fps	0.85 fps	1.8 fps

Note: Measured with 0 sec exposure. Actual results may vary depending upon your experimental conditions.

Fairchild Imaging certifies that its products are fully inspected and tested at the factory prior to shipment, and that they conform to the stated specifications.

This product is designed, manufactured, and distributed utilizing the ISO 9001:2000 Business Management System.

www.fairchildimaging.com email: sales @fcimg.com Phone: +1.800.325.6975 Fax: +1.408.534.7352