OSPREY
CAM/CCD-2KCL.TDI

High Performance Linescan Camera with TDI Sensor Architecture and Anti-Blooming

The Osprey™ is an ultra-sensitive camera for use in line scan applications that demand high performance under low light conditions. The camera is based upon the successful CCD525 sensor application in high speed postal OCR product. The camera has 2048 pixels resolution, with electronically selectable gain stages up to 96 rows. It supports scan rates up to 46K lines per second. The Osprey™ provides 4-port, 8- or 10-bit synchronous data through the Camera Link interface. It includes sophisticated features such as anti-blooming, programmable gain, and offset. It also provides a framing mode for ease of setup. Framing mode is an excellent tool for mechanical and optical alignment of the camera to the target object. The camera is packaged in a compact and rugged housing that contains a standard M58 x 0.75 base lens thread. Optional Nikon F-mount lens adapter is available.

Features

2K x 96 TDI Sensor Architecture

- Uses time delay and integration architecture
- Electronically selectable TDI lengths of 96, 64, 48, 32, and 24 rows
- 1000X anti-blooming
- Framing mode that allows easy optical and mechanical alignment of camera

Full Featured Camera Electronics

- Camera Link interface
- Requires only ONE power supply (12 VDC)
- Low power dissipation (< 5 Watts)
- Programmable gain, offset and CDS gain
- Non-uniformity correction

Standard Interface

- Connects to Base Mode Camera Link Frame Grabbers
- Uses standard Camera Link cable
- Turnkey operation with Fairchild Imaging CFG Configuration File

Applications

- Industrial Inspection
- Flat Panel Display Inspection
- Optical Character Recognition

Camera Performance Specifications

Resolution:	2048
Pixel Size:	13µm x 13µm
Housing Size:	3.92” H x 3.92” W x 1.84” D
Imaging Modes:	TDI 96, 64, 48, 32, 24 rows and framing mode
Anti-Blooming:	> 1000x saturation
CDS Processing:	Quad AD9840 AFEs
Output Ports:	Camera Link
Data Rate:	100 Mpixels/sec (4 x 25MHz)
Maximum Line Rate:	46KHz
Gray Scale:	8-bit / 10-bit
Noise:	<1 LSB (rms)
Saturation Equiv. Exp.:	0.62 nJ/cm^2
Noise Equiv. Exposure:	0.6 nJ/cm^2
Responsivity:	1570 DN/nJ/cm^2
Programmable:	VGA Gain, Offset, CDS Gain
Lens Mount:	M58
Lens Mount Adapter:	M58 to F-mount adapter (optional)
Part Number:	CAM/CCD-2KCL.TDI
Operating Temperature:	45°C
Dynamic Range:	736:1
Power Supply:	12 VDC
Power Dissipation:	< 5W
Regulatory Compliance:	CE, FCC

Sensor

The Osprey camera uses Fairchild Imaging CCD525 sensor. Please contact Fairchild Imaging for sensor details.

Mechanical Dimensions

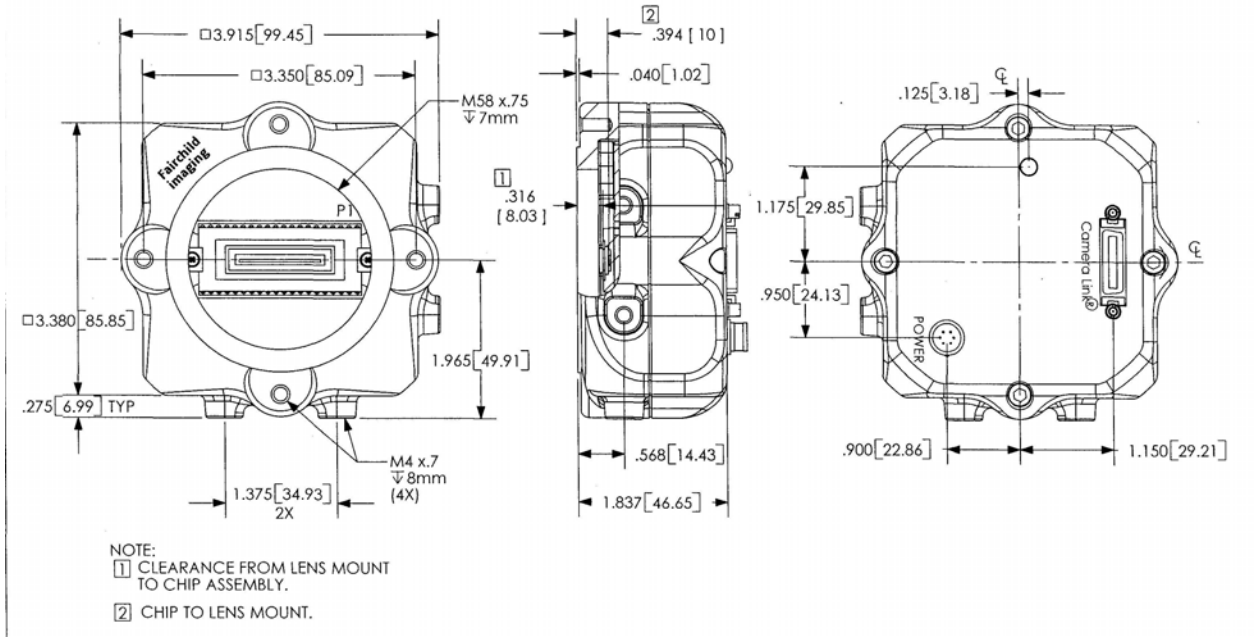

Interface Requirements

Frame Grabber

- Standard Camera Link frame grabbers

Gain / Offset Programming

- Fairchild Imaging-supplied software interface

User Selectable Functions

- Electronic TDI length selection
- Master/slave mode
- Gain (four channels)
- Offset (four channels)
- Output mode (8-bit/10-bit)
- Binning (1x1, 2x1, 2x2)
- Serial Interface (through Camera Link)

Responsivity Curve

Please contact Fairchild Imaging for responsivity curve.

.

WARRANTY

Within twelve months of delivery to the end customer, Fairchild Imaging will repair or replace, at our option, any Fairchild Imaging product if any part is found to be defective in materials or workmanship. Contact Customer Service for assignment of warranty for any Fairchild Imaging product if any part is found to be defective in materials or workmanship.

CERTIFICATION

Fairchild Imaging certifies that all products are carefully inspected and tested at the factory prior to shipment and will meet all requirements of the specifications under which it is furnished.

This product is designed, manufactured and distributed utilizing the ISO 9001:2000 Business Management System.

Fairchild Imaging

1801 McCarthy Blvd., Milpitas CA 95035

(800) 325-6975 or (408) 433-2500

©2004 Fairchild Imaging reserves the right to make changes to its products and/or their specifications at any time without notice. Printed in the U.S.A.